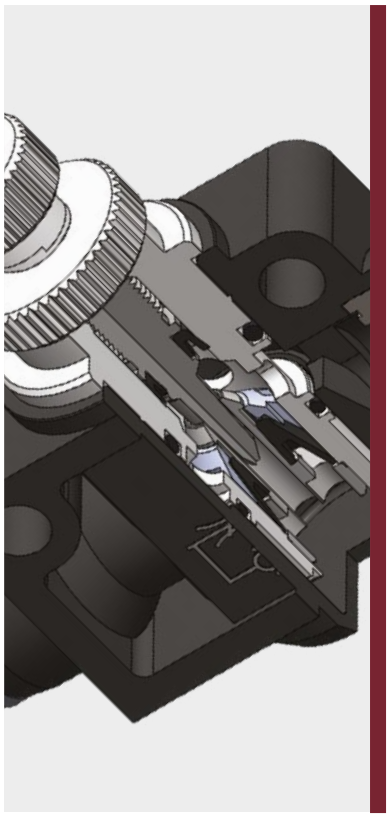

0°C ÷ 60°C

Working pressure:
10 Bar
Negative pressure:
- 0,95 Bar (- 95 Kpa)

Compressed air & Vacuum

Polyamide PA,
Polyurethane PU,
Polyethylene PE

Manual flow regulation

Body: PBT
Collet: POM
Collar: Zinc
Lock claw: Stainless steel AISI 301
Back ring: POM
Seal: NBR
O-ring: NBR
Handle: Nickel-plated brass
Lock nut: Nickel-plated brass

SILICONE FREE

Products in compliance with EC Regulation 1907/2006

Products in compliance with the directive EU 2015/863

CONSTRUCTION DETAILS

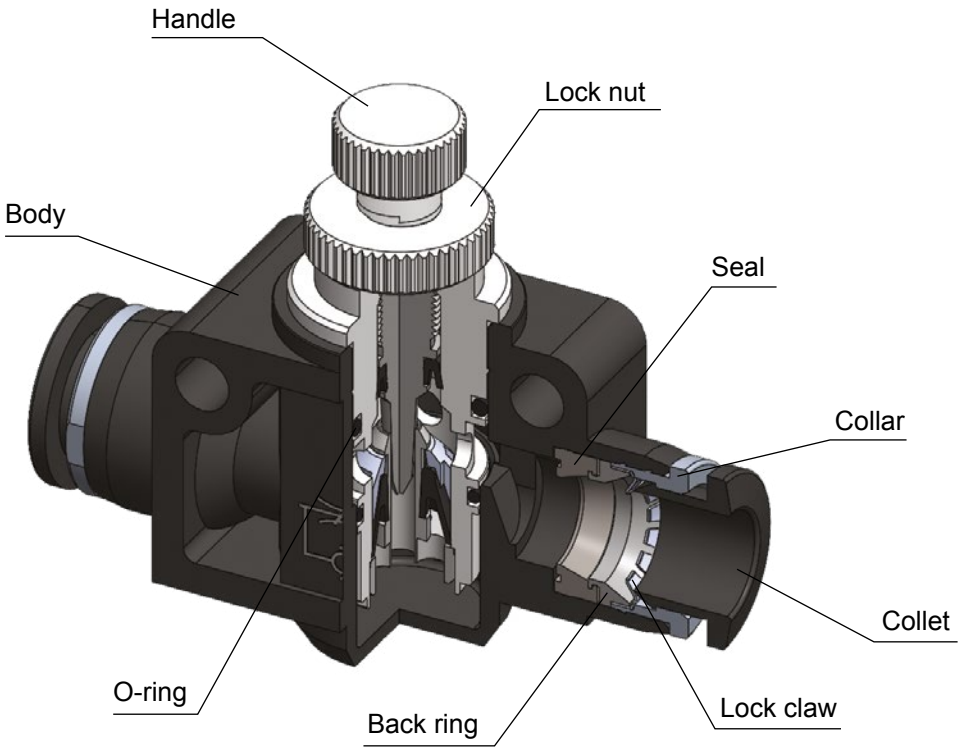

drawings and technical data are not binding & can be changed without notice